RANpump® BY GISAN

TÜV NORD

ISO 9001-2008

CE

RAN 1/2" BS MODEL DIAPHRAGM PUMP OPERATING AND MAINTENANCE MANUAL

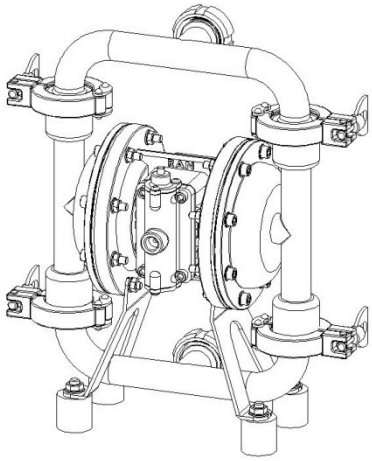

CONTENTS

1.0. IMPORTANT SAFETY REQUIREMENTS

2.0. TECHNICAL DATA TABLE

3.0. DEFINITION OF DIAPHRAGM PUMP

4.0. HANDLING, MOVING, OPENING PACKAGING OF DIAPHRAGM PUMP

5.0. MOUNTING AND CONNECTING OF DIAPHRAGM PUMP

6.0. INSTRUCTIONS AND MANUAL OF DIAPHRAGM PUMP

7.0. ASSEMBLY AND DISMANTLING OF PARTS

8.0. PERIODIC MAINTENANCE

9.0. STORAGE OF DIAPHRAGM PUMP

10.0. PRECAUTIONS ON DISPOSING OF THE DIAPHRAGM PUMP

11.0. SERVICE POINTS

12.0. ORDERING SPARE PARTS

Attachment-1 Pump Performance Charts
Attachment-2 Gisan Warranty

Gisan Machinery Industry and Trade Co. Ltd.
www.ranpump.com

1.0. IMPORTANT SAFETY REQUIREMENTS

a- This equipment is for professional use only. Observe all warnings. Read and understand all instruction manuals, warning labels, and tags before you operate the equipment.

b- **CAUTION: This manual contains important instructions and safety cautions on diaphragm pumps. Read and understand all of it before first use of the pump. Manufacturer is not responsible for the damages and injuries due to inappropriate usage of the pump.**

c- Diaphragm pump usage is limited with the area defined in this manual. Refer to GİSAN for any further questions.

d- Never let unqualified / unauthorized people run diaphragm pump**.**

e- Never alter or modify any part of this equipment; doing so could cause it to malfunction. Use only genuine RAN™ Pump parts and accessories.

f- Illuminate the environment thoroughly for proper usage and maintenance of the equipment.

g- Do not make changes on the pump which can effect working system of the pump.

h- Pump maintenance and repair can be done only by the qualified personnel.

i- Do not surpass the strength of minimum system compound.

j- Learn hazards or potential dangers of your fluid.

k- Choose the wet pump parts' material resistant for your fluids. Refer to the Proper Material-Fluid Chart or your supplier for further information.

l- Use an approved container for the hazardous media.

m- Do not pull the pump from the hoses.

n- Do not let the hoses twist.

o- Make sure that hose connections to the pump are tight to avoid air suction.

p- Do not lift or move the pump while there is pressure in it.

r- If you are working with flammable or toxic fluids, be sure the system is properly ventilated for your type of installation. You must vent the exhaust to a safe place, away from people, animals, food, and all sources of ignition when pumping flammable or hazardous fluids. Note that when there is tear on the diaphragm, the media in the pump will also be exhausted together with the air. Refer to the Figure 9 Air Exhaust.

s- Diaphragm pumps in this technical file are sold only as a pump unit. Control unit is not given with the pump. Operator is responsible for installing a suitable control system if needed.

t- Tightly connect the proper hose for your media to one end of the pump and the other to the tank where the media will be stored.

	WARNING ! **Always wear appropriate clothing and equipment, such as eye protection and breathing apparatus, to protect yourself.**

	WARNING ! **Improper handling, splashing in the eyes, ingestion, or bodily contamination of hazardous fluids or inhaling toxic vapors can cause extremely serious injury or death. Observe all the following precautions when handling known or potentially hazardous fluids.**

	WARNING ! **Altering or modifying any part of this equipment, using eroded or damaged spare parts, or using this pump for inappropriate media may cause the parts to break or be damaged. Thus, the media inside the pump may spill or squirt onto people in the vicinity including sensitive areas, such as eyes. Moreover, it may cause a fire, blast, or physical damage.Use only genuine RAN™ parts and accessories.**

	WARNING ! **Running the pump with hot liquids may cause the surface of the pump to heat up above 80 C^o . Under these conditions, it is pump owner's responsibility to place a warning for the operator not to touch the pump without appropriate protective equipment to reduce the risk of severe burns.**

1.1. WARNING SYMBOLS ON DIAPHRAGM PUMP

No	Warning	Location on Pump	Instruction
1	Pump working pressure range	On fluid covers	RAN Pump Max: 1 – 8 bar

1.2. CONFORMITY TO EU DIRECTIVES AND STANDARDS

All the diaphragm pumps produced comply with the below listed EC directives and standards.

98/37/EC Safety of Machinery
EN ISO 12100-1 Safety of machinery - Basic concepts, general principles for design - Part 1: Basic terminology, methodology (ISO 12100-1:2003)
EN ISO 12100-2 Safety of machinery - Basic concepts, general principles for design - Part 2: Technical principles and properties
EN 809 Pumps and pump units - for liquids - Common safety requirements
EN 983 Safety of machinery - Safety requirements for fluid power systems and their components - Pneumatics
EN 1050 Safety of machinery - Principles for risk assessment

2.0. DIAPHRAGM PUMP TECHNICAL DATA

1/2 ’’ METALLIC PUMP

Specially	Unit	Measure
Pump Type	Inch	1/2’’ stainless steel
Max. fluid working pressure	Bar	8 (0.8 Mpa, 120 Psi)
Air feeding pressure range	Bar	1.0 ile 8 (0.10 - 0.8 Mpa, 120 Psi)
Max. Air consumption	m3/min	0,5
Fluid per cycle	lt/cycle	0.125
Max. Head (for water viscosity)	m	70
Max. Suction depth	m	5
Max. Particle allowance	mm	1,5
Noise power level (at 6 bar)	dBA	90
Max. CAPACITY	lt/min	42
Max. Cycle per minute	cycle/min	336
Max. Fluid temperature	ºC	80 ºC
Min. environment temp.	ºC	+5 ºC
Max. environment temp.	ºC	40 ºC
Air inlet	Inch	1/4”
Air outlet	Inch	1/2”
Fluid inlet	Inch	1/2”
Fluid outlet	Inch	1/2”
Pump housing material		stainless steel
Weight	kg	7 kg

2.1. DIAPHRAGM RUNNING TEMPERATURE DATA

Diaphragm Material	Temperature limits	
BUNA-N	-12,2 ºC	65,6 ºC
PTFE (teflon)	-4,4 ºC	104,4 ºC
Santoprene	-28,9 ºC	104,4 ºC
Polyurethane	-12,2 ºC	65,6 ºC
VİTON	-40 ºC	176,7 ºC
Neoprene	-17,8 ºC	93,3 ºC
EPDM	-51,1 ºC	137,8 ºC

3.0. DIAPHRAGM PUMP DEFINITION

Diaphragm pumps work with compressed air coming from a compressor. Pump working principle is shown in the illustration below.

There are two valves distributing air in the pump. Outer valve is distributing the air to the diaphragms. Inner air valve is rotating the outer valve.

Running a pump fast does not always mean working it most productively. If a pump works at highest capacity continuously, it will have diaphragm and valve problems sooner. It is better to choose a higher capacity pump and should not be used at maximum pressures for long periods.

Diaphragm pump is mounted to the ground or on a tripod from its legs with bolts.

Air operated diaphragm pumps are suitable in transferring the fluids up to 50,000 cP viscosity.

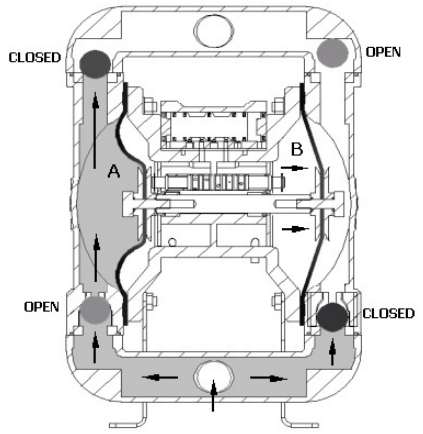	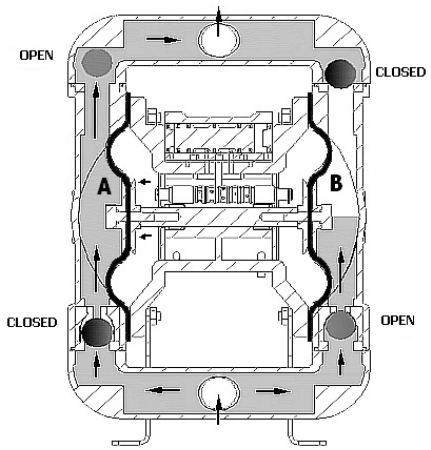	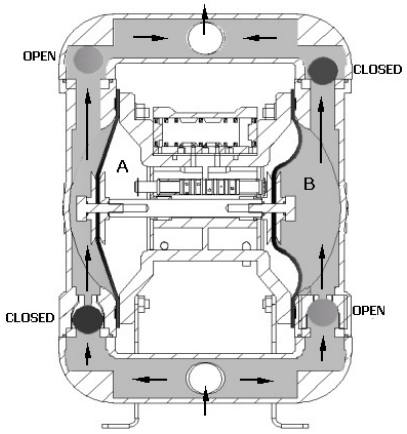
RIGHT STROKE Compressed air is directed to the back side of diaphragm B by the air valve. The compressed air moves the diaphragm away from the center block. The compressed air pushes the liquid column separated by elastomeric diaphragm, forcing the fluid through the fluid outlet. At the same time, the opposite diaphragm is pulled in by the shaft connected to the pressurized diaphragm. So, diaphragm A is on its suction stroke: the air behind diaphragm A is forced out to the atmosphere through the exhaust port of the pump. The movement of diaphragm B away from the center block of the pump creates a vacuum within chamber A. The vacuum force sucks the fluid into the inlet manifold forcing the inlet valve ball off its seat. The fluid is free to move past the inlet valve ball and fill liquid chamber A.	**MIDDLE STROKE** When the pressurized diaphragm, diaphragm B, reaches the limit of its discharge stroke, the air valve redirects compressed air to the back side of diaphragm A. The pressurized air forces diaphragm A away from the center block while, at the same time, the connected shaft pulls diaphragm B to the center block. Diaphragm A is now on its discharge stroke. Diaphragm A forces the inlet valve ball onto its seat due to the hydraulic forces developed in the liquid chamber and manifold of the pump. These same hydraulic forces lift the discharge valve ball off its seat, while the opposite discharge valve ball is forced onto its seat, forcing the fluid to flow through the pump discharge. The movement of diaphragm B toward the center block of the pump creates a vacuum within liquid chamber B. Atmospheric pressure forces the fluid into the inlet manifold of the pump. The inlet valve ball is forced off its seat allowing the fluid being pumped to fill the liquid chamber.	**LEFT STROKE** At completion of the stroke, the air valve again redirects air to the back side of diaphragm B, which starts diaphragm A on its exhaust stroke. As the pump reaches its original starting point, each diaphragm has gone through one exhaust and one discharge stroke. This constitutes one complete pumping cycle. The pump may take several cycles to completely prime depending on the conditions of the application

3.1.Diaphragm pump has the name plate shown on diagram 1

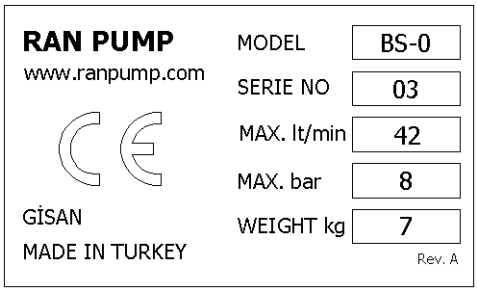

Figure 1- Pump Plate Name

3.2. Diaphragm pump coding system

X X - X

DIAPHRAGM MATERIAL
BODY MATERIAL
INLET OUTLET

INLET OUTLET	BODY MATERIAL	DIAPHRAGM METERIAL
B = 1/2”	A = Aluminium	0 = Buna- N
C = 3/4”	P = Polypropylene	1 = PTFE (teflon)
D = 1”	C = Cast Iron	S = Santoprene
E = 1 ½”	S= Stainless steel	
F = 2”		
G = 3”		

3.3. Main parts of diaphragm pump.

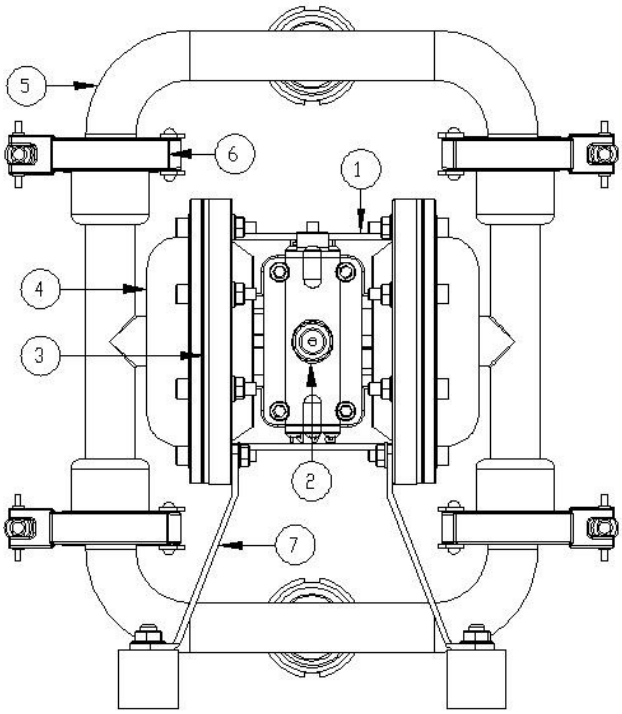

No	Description
1	Center section
2	Valve
3	Diaphragm
4	Body
5	Manifold
6	Clamp
7	Leg

Figure 2 - Diaphragm pump main parts.

3.4. Diaphragm pump main dimensions.

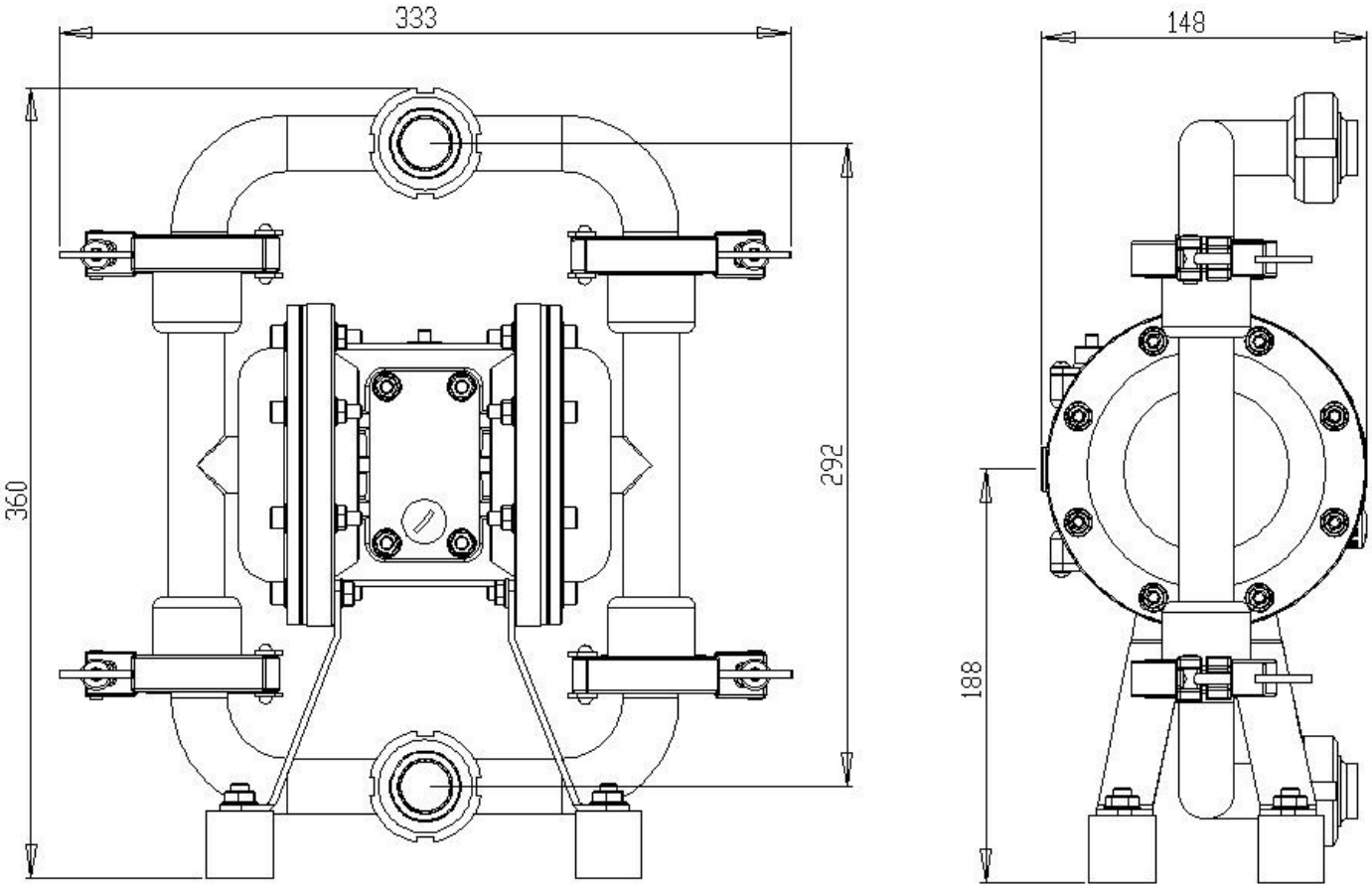

Figure 3 – Diaphragm pump main dimensions.

4.0. HANDLING, MOVING, OPENING THE PACKAGE OF DIAPHRAGM PUMP

Handle the pump from manifolds to move. We put the pumps into carton boxes.

.

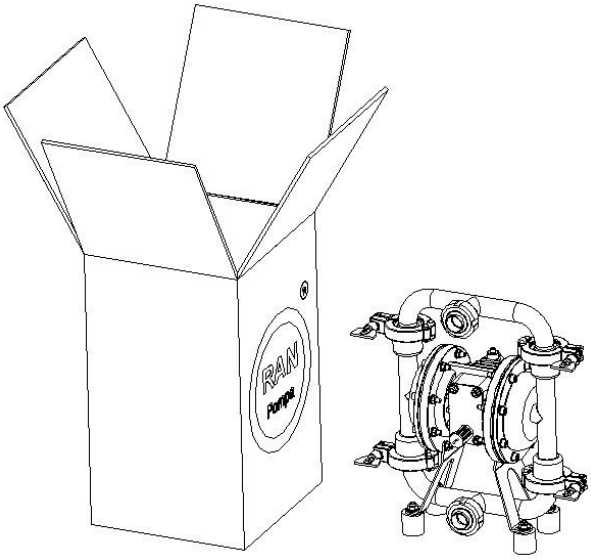

Figure 4 – Pump package.

Pump package must be at least 130 grams and produced from the kraft carton. It must be fully covered with packaging separators.

5.0. MOUNTING AND CONNECTION OF DIAPHRAGM PUMP

A typical connection scheme of diaphragm pump is shown at Figure 7. Refer to your RAN™ Pump distributor for detailed information.
Always use genuine RAN™ Pump parts and accessories.
Install the diaphragm pump to desired place in vertical position.

CAUTION !
Do not overtighten the fittings to the pump. Otherwise you can damage the pump

5.1. Mounting Pump

Keep the points below in mind when choosing the pump mounting place.

- Easy access when operating or maintaining.
- (Air valves, inlet and outlet manifolds of air and fluid, etc.)
- Pump weight to the platform.
- Vibration emission to the ground and other equipment.

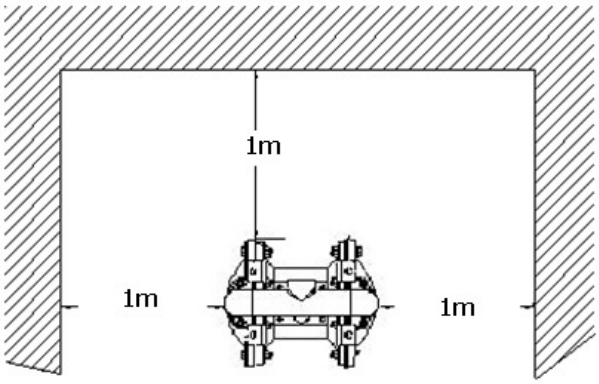

Figure 5 – Minimum space requirement around the diaphragm pump.

5.2. Tightening the bolts before first use

After you unpack the pump, and before you use it for the first time, check and tighten external fasteners. Tighten the fluid cover screws first, then the manifold screws. (Refer to Figure 6 for torque figures). This keeps the manifolds from interfering with tightening the fluid covers.
After using a day check the fasteners again and adjust the torque if necessary. Recommended frequency for tightening fasteners varies with pump usage, a general guideline is to retighten fasteners every two months. (Refer to Figure 6 for torque figures).
Exhaust gas may contain dirty materials. In case of polluting your fluid container, place the exhaust hose away from it. (Refer to Exhaust Air section. Item 5.7) Fasten the pump foot tightly to the platform with bolts. Always use seals (teflon, etc) when connecting with bolts.

Pump Type	Part	Bolt	Torque N.m
RAN 1/2'' M	Air valve	M6	6,8 – 7,6
	Body	M6	9 - 10
	Diaphragm bolt	M8	17 - 20
	Air core	M6	7 - 8

Figure 6 – Pump parts tightening torque table.

5.3. Compressed connection

A bleed-type master air valve is required in your system to relieve air trapped between this valve and the pump. Trapped air can cause the pump to cycle unexpectedly, which could result in serious injury, including splashing in the eyes or on the skin, injury from moving parts, or contamination from hazardous fluids. See Fig. 7.

1-Refer to the Figure 7 for the connection scheme. Fix these accessories to the wall or to a bracket. The air line feeding the accessories must be grounded.
2- Install a filter - regulator to the air line. Use a 5µ (micron) air filter. The pressure of liquid outlet should be level with air regulator's. Air line filter is for cleaning the dust and humidity from the air coming out of the compressor.
3- Install an air discharge valve below the pump inlet air line. It will be used to dicharge remaining air in the pump. Install the main air valve above all air line accessories and use it to cut off the main air from the accessories while maintaining or cleaning.
4-Use a flexible air hose between the pump air inlet and accessories at minimum 3/8 inch (9.5 mm) inner diameter and not longer than 2 meters. For a hose longer than 2 m, enlarge the inner diameter respectively.

5.4 Important poınts whie connecting compressed air to diaphragm pump

1- Pay attention not to let any object go into the pump before connecting to compressed air system.
2- Before connecting to compressed air system, push out all the particles from the system by blowing air.
3-If the hose connections are sealed with teflon tape, wind the tape a few screw teeth before the end of the connecting accessory to avoid any teflon pieces entering the system.
4- When using screw connections, note not to mis-screw or apply excessive power on the screws.

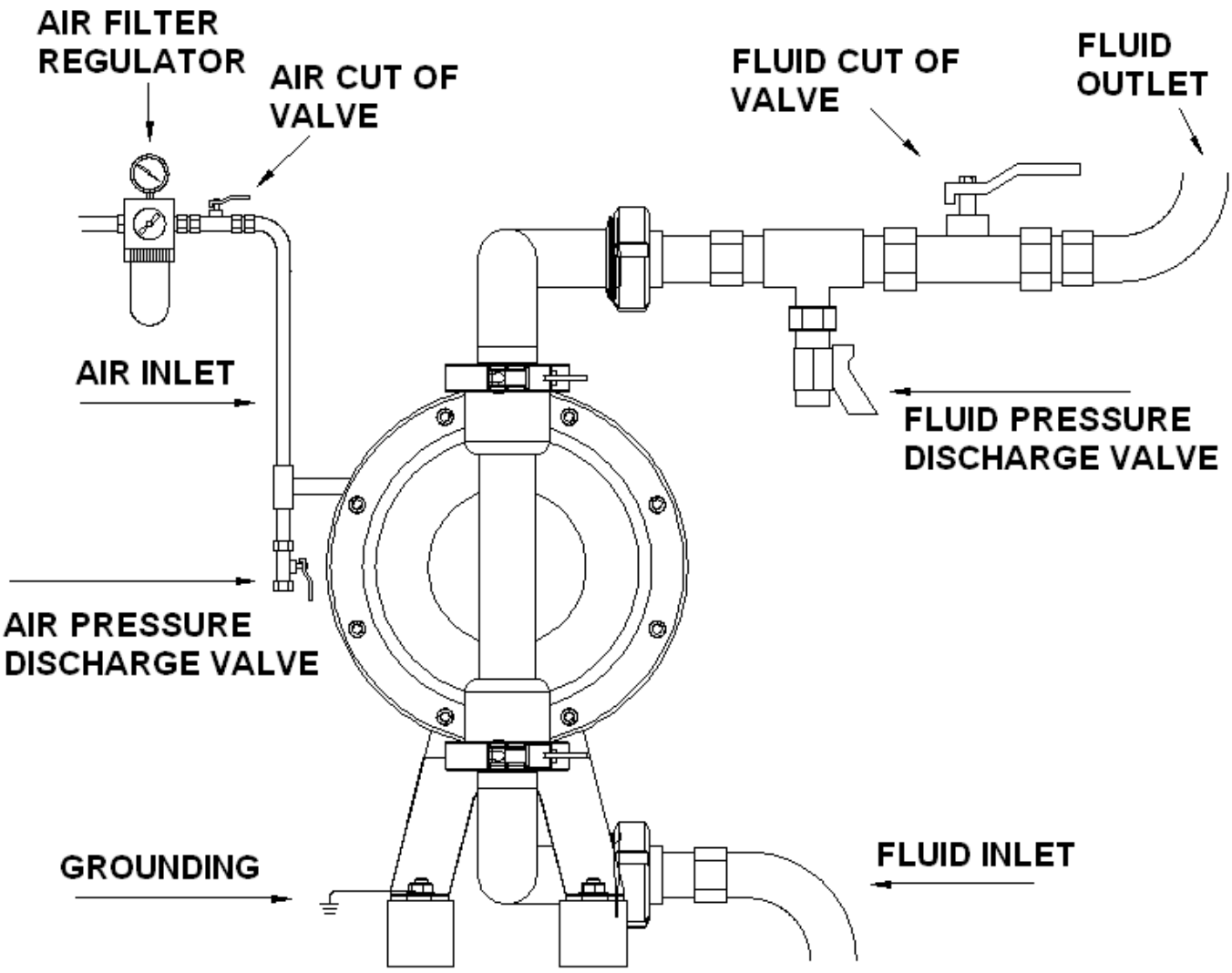

Figure 7- Typical installation scheme

5.5. FLUID LINE

5.5.1. Fluid suction line

1-Use a conductive hose or pipe.
2-Screw fluid fitting into the pump inlet tightly.
3-If the inlet fluid pressure is more than 25% of the outlet working pressure, ball check valves will not close fast enough, result will be inefficient pump operation.
4-At inlet fluid pressures greater than 15 psi (0.1MPa, 1 bar), diaphragm life will be shortened.

5.5.2. Fluid discharge line

1-Use a conductive fluid hose or pipe. The pump fluid outlet is 1/2”. (f).
2-Screw the fluid fitting into the pump outlet securely.
3-Install a fluid drain valve at the pump outlet.
4-Install a fluid shut off valve at the fluid outlet.

5.6 GROUND THE PUMP AS SHOWN BELOW

5.6.1. For the pump: Use a conductor (for grounding) with a cross-section of at least 1.5 mm^2 . Connect the conductor to the pump’s leg as shown on Fig. 8, and the other end to the grounding line.

5.6.2. For Air or Fluid Hoses: Use hoses that are at most 150 m long and that can be grounded.

CAUTION !
To reduce the risk of static sparking, ground the pump and all other equipment used or located in the pumping area.

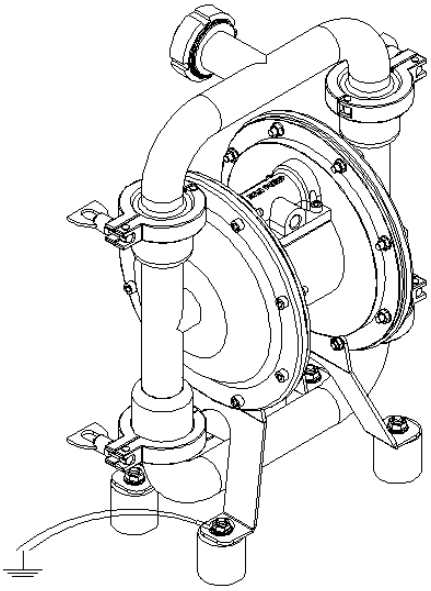

Figure 8- Pump grounding

5.7. Ventilating exhaust air

You must vent the exhaust to a safe place, away from people, animals, food, and all sources of ignition when pumping flammable or hazardous fluids. Note that when there is tear on the diaphragm, the media in the pump will be exhausted together with the air. To avoid this, exhaust the gas away from the operation environment. The pump exhaust air may contain contaminants. Ventilate to a remote area if the contaminants could affect your process.

When transferring hazardous fluids, follow the steps below:

1. Remove the muffler from the exhaust port.
2. Install a conductive and grounded air exhaust hose with the minimum diameter of 1/2 inch 13 mm ID. If a hose longer than 4.5 m is required, use a larger diameter hose. Avoid bending the hose sharply.
3. Place a suitable conductive container at the end of exhaust hose to catch the fluid in case diaphragm ruptures.

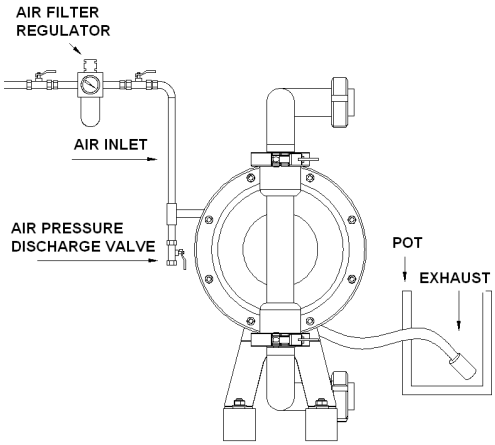

Figure 9- Ventilating exhaust air

WARNING !

When you are transferring hazardous fluids or the pump temperature is over 60C, operator has to make precautions to drain the fluid.

WARNING !

FIRE AND EXPLOSION HAZARD

If you are working with flammable fluids, be sure to take precautions around the pump while cooling it. You must vent the exhaust to a safe place

WARNING !

Diaphragm pumps are sold as pump unit only. Installing a control device (if needed) is the responsibility of the operator.

If the power supply of the pump (compressor) is stopped, the air inlet to the pump must be cut off immediately. Otherwise when compressor restarts, pump may start unexpectedly.

Manual operation: If the power supply of the pump (compressor) is stopped, operator must cut off the air feed to the pump manually. The operator must be informed and warned about this.

Automatic operation: If the power supply of the pump (compressor) is stopped, control unit must cut off the air feed to the pump automatically. Installing this system is the responsibility of the operator or the owner.

6.0. PUMP OPERATION INSTRUCTIONS

IMPORTANT NOTE

The pump has a variable temperature resistance to the transferred fluid. The temperature resistance of the diaphragm, balls, and balls' bed defines the temperature resistance of the pump.

6.1. Flush the pump before use.

Pump is tested with water. Flush the pump with a proper solvent before use if your fluid is effected by water. Follow the instructions in *Starting and Adjusting the Pump.*

6.2 Starting and adjusting the pump

1- Check pump grounding before use.
2- Check fittings to be sure they are tight. Use a compatible liquid thread sealant (teflon, etc.) on male threads. Tighten fluid inlet and outlet fittings securely.
3- Submerge the suction hose in the fluid.
Note: If the inlet fluid pressure is more than 25% of the outlet working pressure, ball check valves will not close fast enough, result will be inefficient pump operation.
4- Place discharge hose in a suitable container.
5- Turn off the fluid drainage valve.
6- Turn the air regulator knob three quarters of a cycle clockwise, and open all bleed-type master air valves.
7- Increase the air pressure slowly using the air regulator untill the pump primes. Set air regulator to 2 bar pressure. Operate the pump slowly until it is fully loaded.
8- Working with thick fluids, operate the pump **very** slowly until it is fully loaded.
9- Pump is tested with water. If you need a clean pump in your process, flush the pump with suitable fluid until it is fully clean. Then put the suction hose in the fluid container to be pumped.

WARNING !
Do not run the pump before you make sure all the adjustments are OK.

6.3. Stopping the pump

Cut off the air when the pump is not working.

WARNING !

PRESSURIZED EQUIPMENT HAZARD

The equipment stays pressurized until pressure is manually relieved. To reduce the risk of serious injury from pressurized fluid, accidental spray from the gun or splashing fluid, follow *Pressure Relief Procedure* whenever you

- **need to relieve pressure**
- **stop pumping check, clean or service any system equipment**

6.4. Pressure relief procedure

1. Shut off the air valve. To relieve the air between the air valve and the pump, use the Air Pressure Discharge Valve.
2. Shut off the Fluid Valve. Place a container under the Fluid Pressure Discharge Valve and open the valve. Take the Fluid Discharge Hose off.
3. To discharge the fluid inside the pump follow the instructions below.
   a. Put on proper equipment for the fluid you are pumping. Shut off the valve on the fluid inlet hose if installed. Have a container ready to catch the drainage. Pull out the fluid inlet hose from the manifold. Unravel it from the ground if fixed.
   b. Before pulling out the hose from the pump put a container under the pump. Pull it out slowly and carefully.

7.0 ASSEMBLY AND DISMANTLING OF THE PARTS

WARNING:
Before service and maintenance always relieve the air and fluid pressure.

This explanation uses figures defined in part (7.0) line (12) fig. 13.

7.1. Ball check valve repair

Tools required

- Torque wrench
- 5 mm allen key
- 10 mm wrench

7.1.1 Dismount

NOTE: To ensure proper seating, you should change the seats with the ball check valves.

1. Relieve the pressure in pump. Remove the hoses.
2. Dismount the pump from the ground.
3. Remove the upper elbow manifolds and bolts fixing them to the main body clamp.
4. Remove the manifold o-rings, ball cages, valve balls and ball seats from the pump cover.
5. Turn the pump over. Remove inlet manifolds. Remove the o-rings, ball cages and and valve balls from the pump.

7.1.2.Mounting

1. Clean all the parts and inspect for wear.
2. You can assemble the pump following the reverse order. Check valve balls must be placed on the cages as their own weight.
3. If assembled incorrectly, the pump will not work.
4. Tighten the screws applying the proper torque from the torque chart. (Fig. 6)

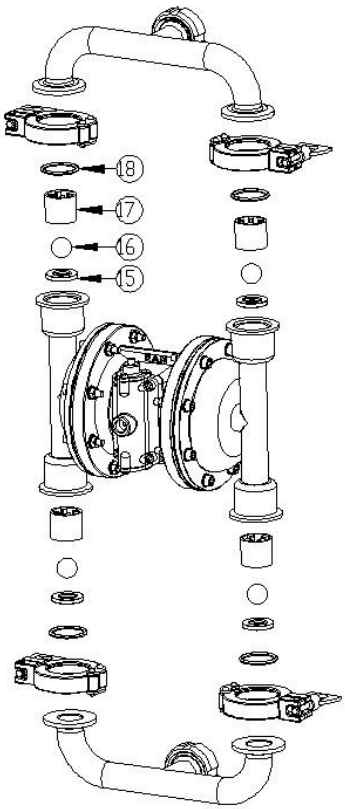

Figure 10- check valve repair

7.2. Changing diaphragm

Tools Required

- Lithium-base grease (non-freezing silicone grease)
- 5 mm allen key
- 10 mm wrench
- 13 mm wrench
- torque wrench
- Philips-head screwdriver

WARNING!
Transferred liquid goes into air chamber of pump when the diaphragm ruptures. Liquid can damage the pilot valve o-rings and the air valve o-rings due to its chemical behaviour. For this reason you must check and replace (if needed) the o-rings while you are changing the diaphragm. If only the diaphragm is changed this will not be good maintenance and you can have a pump problem soon.

1. Relieve the pressure.
2. Remove the manifolds and disassemble the ball check valves as explained in *Ball Check Valve Repair* section.
3. Using a 5 mm allen key, remove the bolts holding the fluid covers to the main covers. Pull the fluid covers off the pump.
4. Loosen the diaphragm both shaft bolts using a 13 mm wrench, and remove one bolt but not both.
5. Remove o-ring, Teflon® diaphragm (if there is) and rubber diaphragm.
6. Pull the other diaphragm assembly and the diaphragm shaft out of the center housing. Hold the shaft with a 13 mm open–end wrench, and remove the bolt from the shaft.
7. Disassemble the remaining diaphragm assembly.
8. Inspect the diaphragm shaft for wear or scratches. If it is damaged, inspect the bearings in place.
9. Remove the tap which holds the pilot shaft and diaphragm shaft.
10. Clean all parts and inspect for wear or damage.
11. There is written text on the air side of the diaphragm.
12. Grease the diaphragm shaft lightly.
13. In the Teflon Diaphragmed pumps, Rubber diaphragm is protected by putting a teflon diaphragm to the side that meets fluids.
14. Assemble the parts in the reverse order to which you disassembled.
15. Tighten the screws applying the proper torque from the torque chart. (Fig. 6)

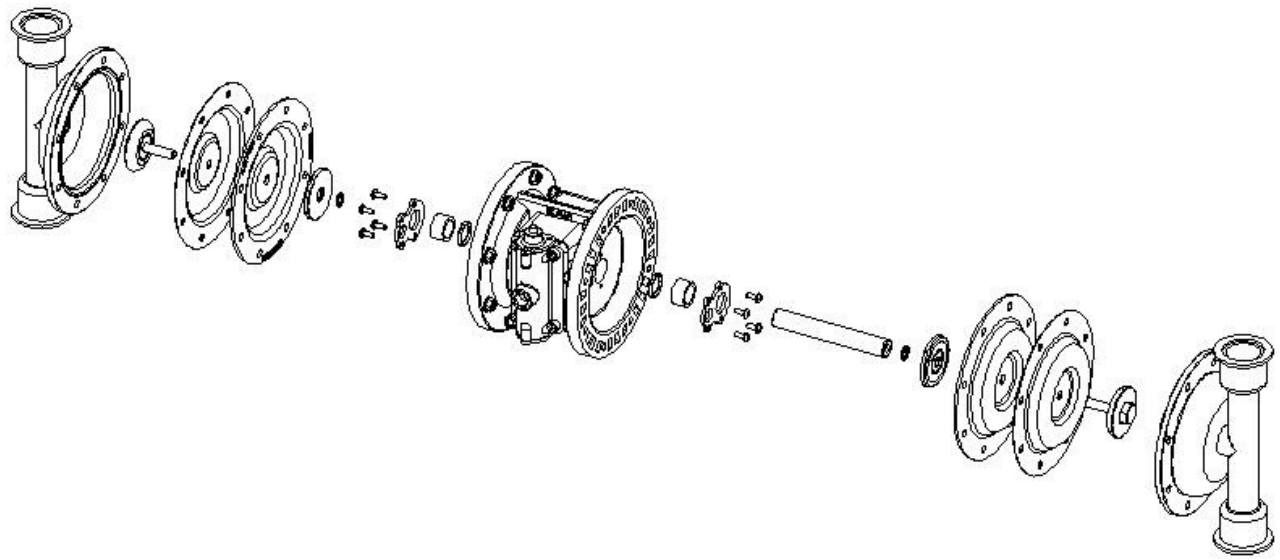

Figure 11- Diaphragm change

7.3 Air valve repair

Tools Required

- Torque wrench
- 5 mm allen key
- 10 mm wrench
- Z-ring pick
- Lithium-base grease (non-freezing silicone grease)

NOTE: Hold the air valve vertical position if the core is sliding with its own weight in the valve body, valve z-rings has to be changed.

1. Relieve the pressure.
2. Unscrew the bolts fixing the valve.
3. You will see two taps at the sides of the valve. Push a tap with your finger until the valve core comes out.
4. Valve core should move in the valve body a little bit tightly. If it moves loosely, the teflon rings must be worn. They, as well, must be changed.
5. Make sure you do not damage the z-rings when inserting valve core into the valve body. Before inserting the core to valve body, grease it slightly with a suitable oil.
6. Valve core must lean against one of the taps. Otherwise, the core does not move.
7. Tighten the screws applying the proper torque from the torque chart. (Fig. 6)

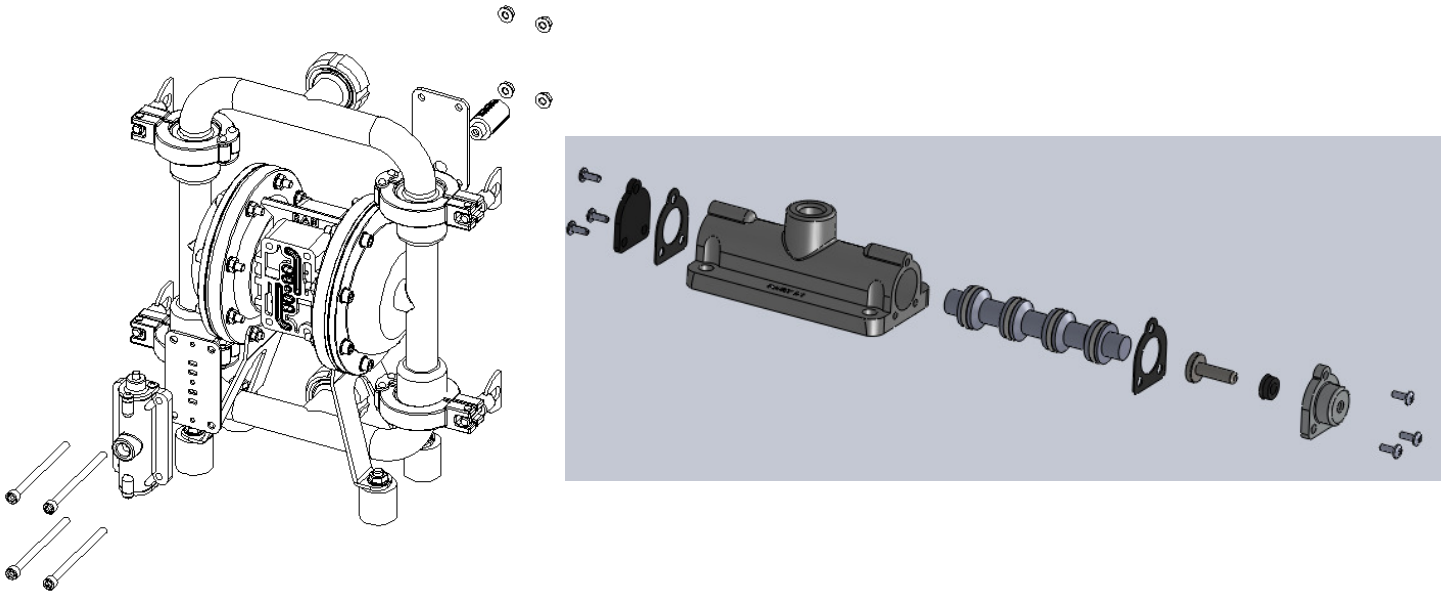

Figure 12- Air valve repair.

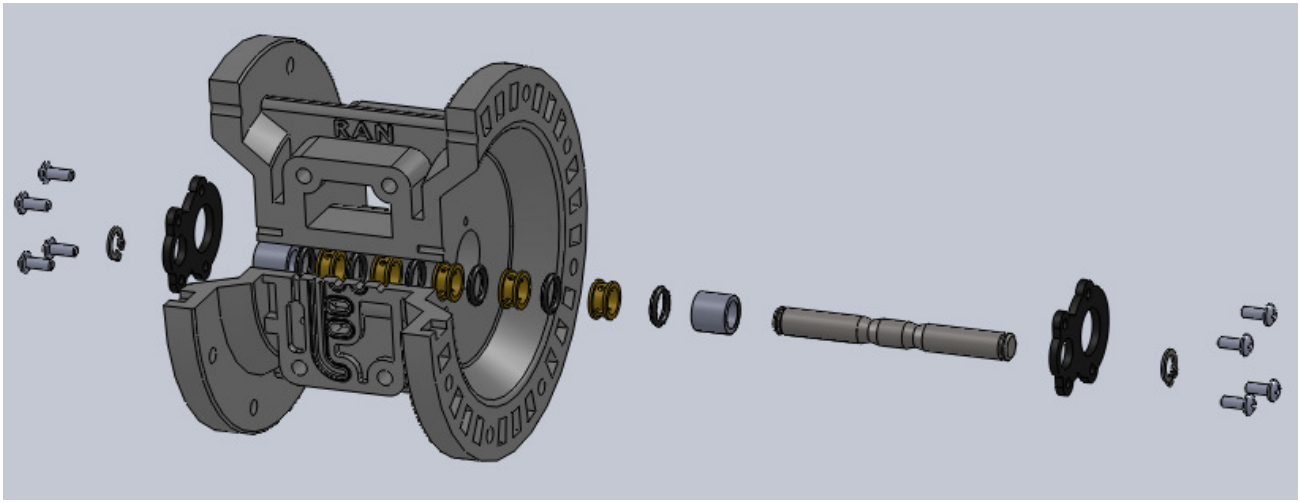

Figure 12a- Pilot valve repair

8.0 PERIODIC MAINTENANCE

8.1 Cleaning and storage of the pump

Do not let your fluid dry in the pump or in the hoses. It may harm the pump. Clean the pump regularly by pumping a suitable solvent for your fluid until the pump is cleaned. Make sure the fluids you are using are compatible with your diaphragm material. If you are not going to use the pump for a long period, clean the pump and relieve the pressure in the pump.

8.2 Tightening the screw connections

Inspect damage on the hoses before every use and change if necessary. Check all the screw connections for tightness and seals against leaks. Check the screw connections in every two months and re-tighten with proper torque. First tighten the fluid cover screws than the manifold screws.Tighten the screws applying the proper torque from the torque chart.(Fig. 6)

8.3 DAILY MAINTENANCE

1. Check the air filter and regulator.
2. Check if there is water or moisture in the filter.
3. Check the air pressure set value of the pressure regulator.
4. After you finish work, clean the pump by pumping a suitable solvent for your fluid until the pump is cleaned.

8.4. WEEKLY MAINTENANCE

1. Apply the instructions for daily maintenance.
2. Clean the check valve balls and ball seats.
3. Clean the exhaust.

8.5. MONTHLY MAINTENANCE

1. Check the valve balls diameter. Check the inner diameter of the ball seats.
2. Ball diameter must be bigger (at least 1.5 mm) than the inner diameter of the seat. Both of them must have a smooth surface.
3. If there is capacity decrease change the balls and seats both.
4. Check the pilot valve and the o-rings.
5. Check diaphragms.
6. Clean the wetted parts of pump.
7. After 500 hours of operation or once a month stop the pump. Relieve the pressure in it. Remove the air hose. Apply 2 drops of suitable oil to the pump air valve inlet and insert the air hose again.

The extra oil is emitted from the exhaust. The exhausted oil may dirty the pumped fluid and environment.

8.6 Troubleshooting

PROBLEM	CAUSE	SOLUTION
1- Pump cycles at stall or fails to hold pressure at stall.	Worn check valve balls, seats or o-rings.	Replace.
2- Pump will not cycle, or cycles once and stops.	Air valve is stuck or dirty.	Disassamble and clean air valve. Use ONLY filtered air.
	Check valve ball severely worn and wedged in seat or manifold.	Replace ball and seat.
	Check valve ball is wedged into seat, due to overpressurization.	Install a pressure relief valve.
	Dispensing valve is clogged.	Relieve pressure and clean valve.
3- Pump operates erratically.	Suction line is clogged.	Inspect; clean.
	Sticky or leaking ckeck valve balls.	Clean or replace.
	Diaphragm is ruptured.	Replace.
	Pump is sucking air.	Check inlet hose and inlet manifold o-rings.
	Restricted exhaust.	Remove restriction.
4- Air bubbles in fluid.	Suction line is loose.	Tighten.
	Diaphragm is ruptured.	Replace.
	Loose inlet manifold, damaged seal between manifold and seat, or damaged o-rings.	Tighten manifold bolts, or replace seats or o-rings.
	Loose diaphragm shaft bolt.	Tighten or replace.
	Damaged o-ring.	Replace.
5- Fluid in exhaust air.	Diaphragm is ruptured.	Replace.
	Loose diaphragm shaft bolt.	Tighten or replace.
	Damaged o-ring.	Replace.
6- Pump frequently stops running.	Insufficient hose diameter.	Get a larger diameter hose.
	Too much hose length.	Use a shorter hose.
7- Pump stops working and exhausts air.	Air valve is stuck or dirty.	Disassamble and clean air valve. Use filtered air.
	Air valve z-rings are worn.	Disassamble and replace z-rings.
	Pilot valve o-rings are worn.	Disassamble and replace o-rings.
	Air inlet pressure and flow are not enough.	Rise the pressure and flow.
8- Pump leaks fluid externally from manifold body connects.	Loose manifolds, damaged o-ring between manifold and seat.	Replace o-rings, tighten manifold bolts.
9- Diaphragm moves to inside of the pump, and fluid leaks from the openings.	Fluid outlet is clogged or outlet valve is closed when the pump is under pressure.	Clean the outlet line or open the fluid outlet valve.
	Max. air pressure is exceeded.	Lower the air pressure.
	The fluid temperature is above the working limits. Adjust the air pressure according to the fluid temperature.	Lower the air pressure.

9.0. STORAGE OF THE DIAPHRAGM PUMP

If you are not going to use the pump for a long period, clean it before storage. If the pump is to be stored before first use, store it in clean environment. Don't remove the protective covers from the inlets, outlets, and air connections. Clean the pump throughly before first use.

9.1. The things to be done in the intervals

If you are using the pump for densening or stiffening fluids, always clean the pump after use. Don't leave the fluid in the pump if not used for a while. Otherwise check valves and diaphragm may damage. In freezing cold weather clean the pump after you are finished operation.

10.0. PRECAUTIONS ON DISPOSING OF THE DIAPHRAGM PUMP

Follow these precautions before disposing the pump.

- Discharge the pump completely.
- Disconnect all the hoses.
- Clean the pump throughly.

11.0. SERVICE POINTS

If you haven't been able to sort out the problems with the ways mentioned above, call after sale service and get technical assistance

Tel: **00 90 212 875 03 17** (pbx)
Fax: **00 90 212 875 03 18**.
Address: Birlik Sanayi sitesi 3. Cadde No:83 Beylikdüzü Istanbul Turkey
E-mail / Web : **info@ranpump.com** / **www.ranpump.com**

12.0 ORDERING THE SPARE PARTS

No spare parts given with the diaphragm pump. Contact us using the ways above for order.

NO	CODE	PARTS	QTY	NO	CODE	PARTS	QTY
1	B1012	Center Section	1	21	B3618	Fittings	2
2	B1111	Shaft O-ring	2	22	B3010	Valve	1
3	B1211	Shaft seat	2	23	B3010	Valve seal	1
4	B1311	Shaft Cover	2	24	B3311	Exhaust cover	1
5	-	Shaft Cap bolt	14	25	B3313	Exhaust	1
6	B1411	Shaft	1	26	-	Valve Fixing bolt	4
7	A1101	Flange O-ring	4	27	B3010	Valve Core	1
8	B1611	Diaphragm Flange	4	28	B3010	Valve cover gasket	2
9	B1713	Santoprene Diaphragm	2	29	B3010	Valve cover	1
10	B1712	Teflon Diaphragm	2	30	B3010	Valve Reset Button	1
11	B1613	Diaphragm flange	2	31	B3010	Valve button felt	1
12	B1813	Body	2	32	B3010	Valve button cover	1
13	-	Body Fixing bolt	32	33	B2811	Pilot shaft	1
14	-	Body Fixing nut	36	34	B2511	Pilot shaft seat	2
15	B2212	Ball seat	4	35	B2611	Pilot shaft o-ring	6
16	B2112	Ball	4	36	B2711	Pilot shaft cage	5
17	B2011	Ball cage	4	37	B2911	Pilot shaft ring	2
18	B2312	Ball O-ring	4	38	B3616	Leg	2
19	B3516	Manifold	4	39	B3619	Leg wedge	4
20	B3617	Clamp	4				

Figure 13: Spare parts list for RAN 1/2” pump.

NOTE:Please you state model number have gave spare part order.

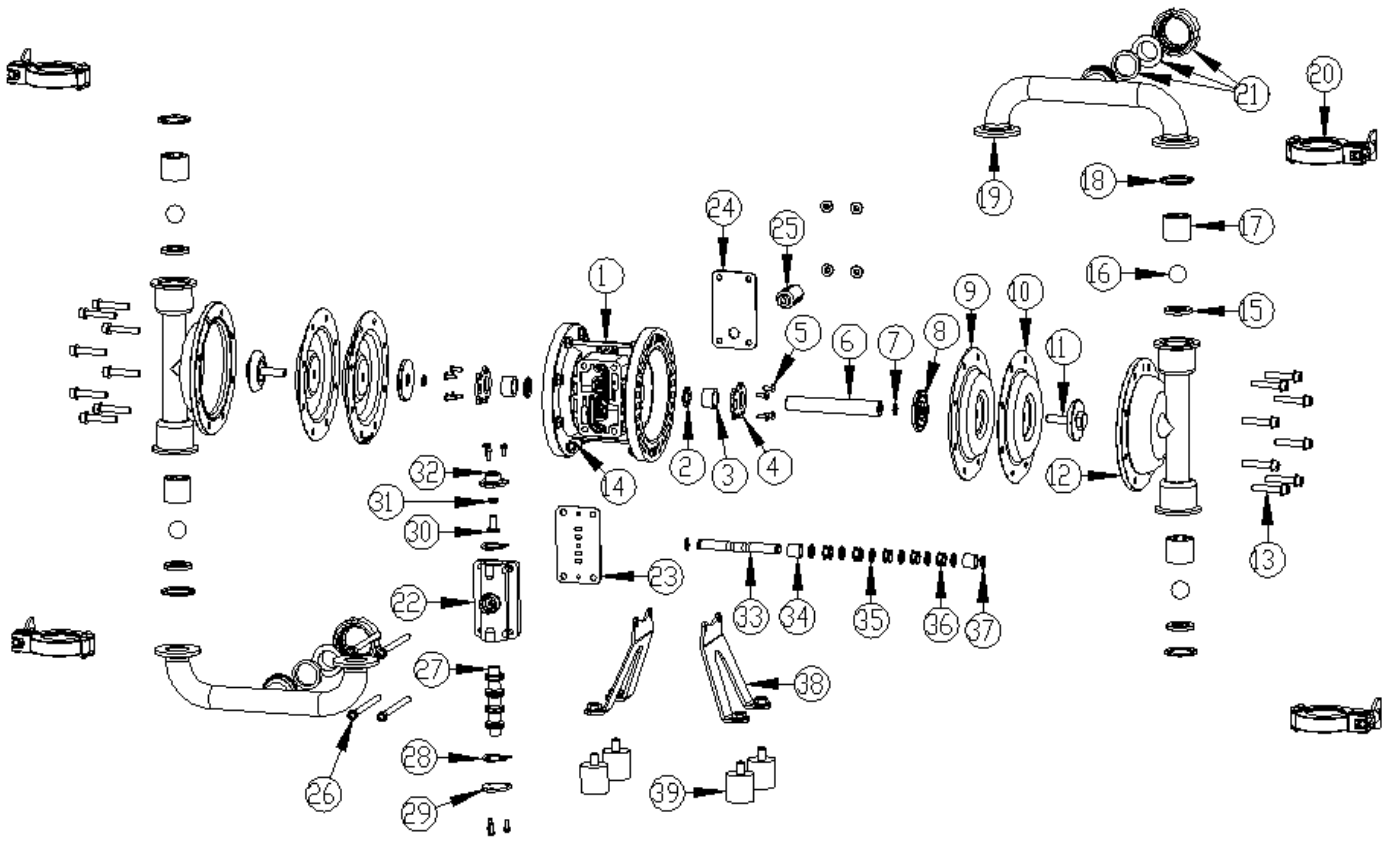

Figure 13a: Pump assembly scheme for RAN 1/2”.

ATTACHMENT-1

1/2" DIAPHRAGM PUMP PERFORMANCE CHARTS

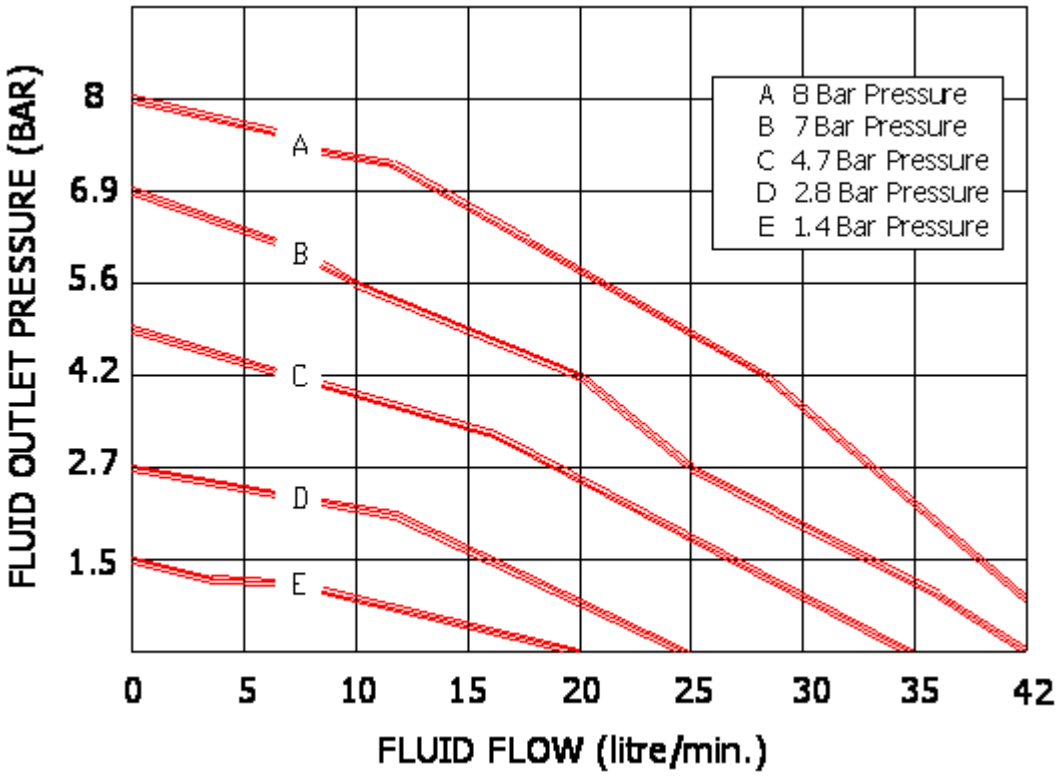

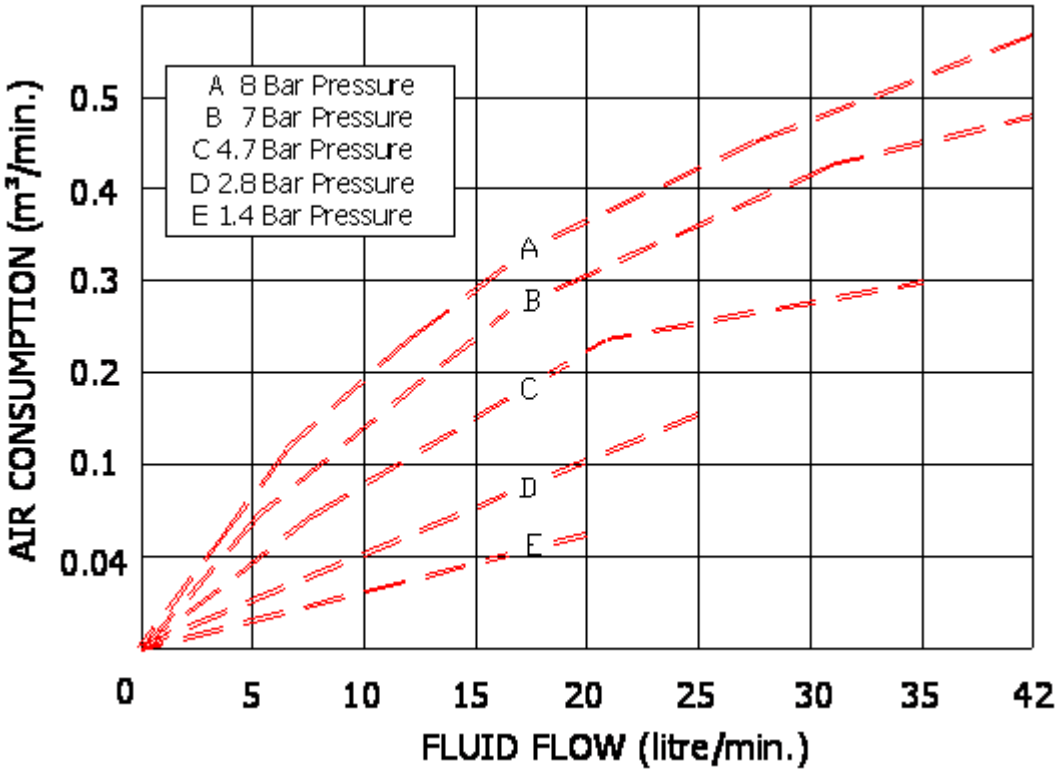

*Reduce the flow by 20% at the charts above, if there is Teflon diaphragms in your pump.

ATTACHMENT-2

GISAN WARRANTIES

Gisan Standard RAN Pump Warranty
Gisan warrants all equipment manufactured by Gisan and bearing its name to be free from defects in material and workmanship on the date of sale to the original purchaser for use. With the exception of any special, extended, or limited warranty published by Gisan, Gisan will, for a period of two years from the date of sale, repair or replace any part of the equipment determined by Gisan to be defective. This warranty applies only when the equipment is installed, operated and maintained in accordance with Gisan's written recommendations.

This warranty does not cover, and Gisan shall not be liable for general wear and tear, or any malfunction, damage orwear caused by faulty installation, misapplication, abrasion, corrosion, inadequate or improper maintenance,negligence, accident, tampering, or substitution of non-Gisan component parts. Nor shall Gisan be liable formalfunction, damage or wear caused by the incompatibility of Gisan equipment with structures, accessories,equipment or materials not supplied by Gisan, or the improper design, manufacture, installation, operation ormaintenance of structures, accessories, equipment or materials not supplied by Gisan.

This warranty is conditioned upon the prepaid return of the equipment claimed to be defective to an authorized Gisan distributor for verification of the claimed defect. If the claimed defect is verified, Gisan will repair or replace free of charge any defective parts. The equipment will be returned to the original purchaser transportation prepaid. If inspection of the equipment does not disclose any defect in material or workmanship, repairs will be made at a
reasonable charge, which charges may include the costs of parts, labor, and transportation.

Gisan's sole obligation and buyer's sole remedy for any breach of warranty shall be as set forth above. The buyer agrees that no other remedy (including, but not limited to, incidental or consequential damages for lost profits, lost sales, injury to person or property, or any other incidental or consequential loss) shall be available. Any action for breach of warranty must be brought within two years of the date of sale.
Gisan makes no warranty, and disclaims all implied warranties of merchantability and fitness for a particular purpose in connection with accessories, equipment, materials or components sold but not manufactured by Gisan. These items sold, but not manufactured by Gisan (such as hose, etc.), are subject to the warranty, if any, of their manufacturer. Gisan will provide purchaser with reasonable assistance in making any claim for breach of thesewarranties.

Extended Product Warranty
Gisan warrants all RAN Pump air valve center sections to be free from defects in material and workmanship for a period of two years from date installed in service by the original purchaser. Normal wear of items such as packings are not considered to be defects in material and workmanship.

Five years Gisan will provide spare parts and labor.
Five to ten years Gisan will replace defective parts only.

All written and visual data contained in this document reflects the latest product information available at the time of publication. Gisan reserves the right to make changes at any time without notice

Gisan Information

If you need further information please contact Gisan distributor in your country or call this number to identify the distributor closest to you.

Gisan Makine San. Tic. Ltd. Şti.
Birlik Sanayi Sitesi 3. Cadde No: 83 Beylikdüzü Istanbul Turkey
Tel. : 00 90 212 875 03 17 (pbx)
Faks:00 90 212 875 03 18
E-mail / Web : **info@ranpump.com** / **www.ranpump.com**